KÄRCHER

makes a difference

MCM 600
THE NEW GENERATION SWEEPER

PROFESSIONAL | MUNICIPAL | MCM 600

A SYSTEM FOR ALL SWEEPING NEEDS

MCM 600 is the ideal choice for municipal cleaning in urban and suburban areas, as well as the best option for the heavy duty sweeping needs of industrial plants (foundries, cement factories and mines), and for all jobs that require high sweeping performance without releasing any dust particles in the air.

Ecological
Dry sweeping and PM1-certified green filter

Powerful
Mechanical suction and filtering technology with load-sensing and electronic management.

Cost-saver
High speed sweeping with maximized hourly yield. Dry sweeping = cost-cutting of waste disposal

All-in-one
Better performance both of municipal and industrial operations

TECHNOLOGY AT YOUR SERVICE

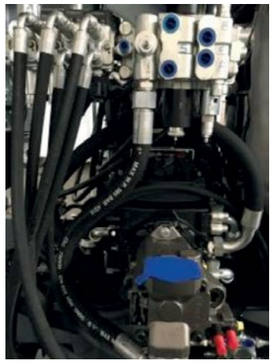

Performance and cost saving

MCM 600 is equipped with electronically controlled "automotive" hydrostatic traction and load-sensing system to optimize power supply, as well as energy saving in any working and driving condition.

ECO MODE FUNCTION ENSURES FUEL SAVING UP TO 25%

Ease of use and functionality

All driving and working functions of the machine are easily managed through a control panel with a LCD display and function keys on the left side of the steering wheel. Intuitive graphics and user-friendly controls make easy to learn and manage all driving and sweeping functions.

Ergonomy and comfort

The cabin is designed to offer top level comfort and ease of driving conditions, complying with the highest safety and ergonomic standards and guaranteeing full control in all working phases.
The cabin hosts three type-approved seats and no central tunnel for easy access of the operators.

Accuracy and effectiveness

Ground pressure of the central broom is automatically controlled through a patented system ("CDS - Clever Detective System"), which adapts and adjusts the pressure of the central broom and guarantees a costant pressure on the ground, regardless of the type and condition of the surface. This ensures the best cleaning precision and less wear of the brushes.

THE MOST EFFECTIVE SOLUTION

The collection of materials mechanically occurs by means of two hydraulic powered side brushes, conveying the debris to the center of the machine, from where a broom transfers them at high speed to the blades of a vertical conveyor and then to the hopper.

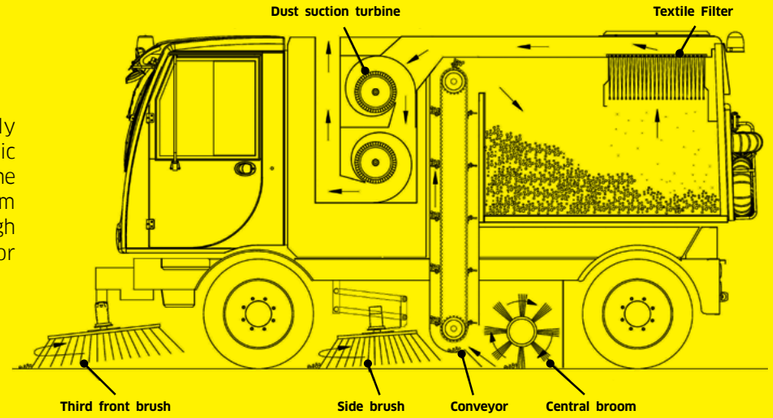

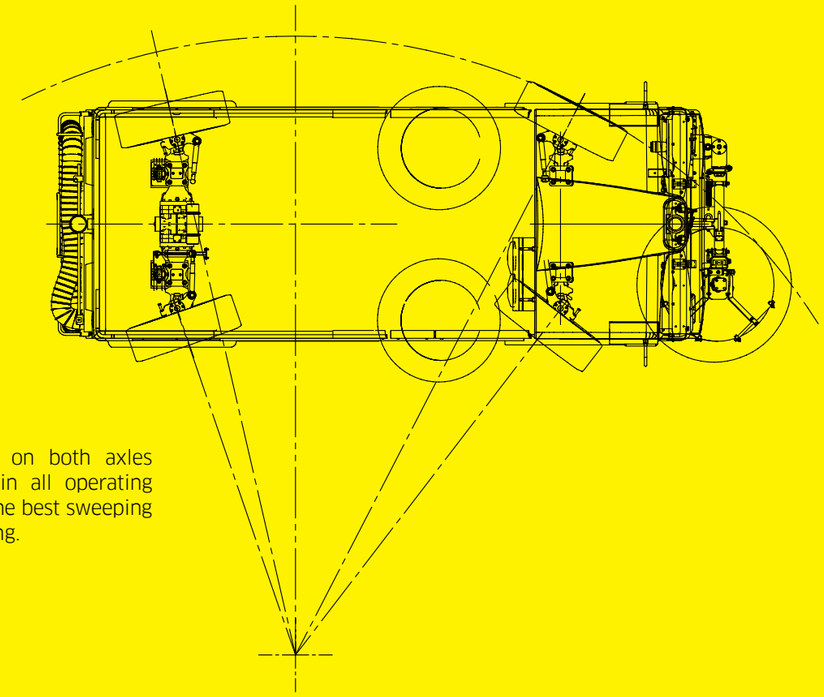

4-wheel steering
The synchronized steering on both axles improves maneuverability in all operating conditions and guarantees the best sweeping precision, even while turning.

The combined mechanical/suction/filtering collection guarantees the efficent and fast loading of any type of material - from dust to leaves, as well as gravels and debris. The efficient suction system optimizes the collection of dusts and light materials. The polyester pocket filter captures fine dust particles up to PM1 under all operating conditions. The introduction of pollutants into the atmosphere is thus almost completely eliminated.

Two automatic driving modes:

Eco-Mode: maximum driving speed 20 mph (32 km/h) with low RPM to reduce fuel consumption up to 25%.

Power Mode: maximum driving speed 20 mph (32 km/h) even when fully loaded and uphill. Always ensuring the best rate of fuel consumption.

CERTIFIED EUnited Municipal Equipment PM 2.5 PM 10 ★★★★ FOR A CLEAN ENVIRONMENT acc to EN 15429-3

High dump
7.8 cu. yd. (6 m³) stainless steel waste hopper, dumping height 53" (1,340 mm) *optional 94" (2,400 mm).*

Easy access
To all mechanical and hydraulic parts for the quickest service and maintenance operations.

THE MOST SUITABLE CONFIGURATION

STANDARD CONFIGURATION

- Easy control electronic operation
- Air conditioning system
- Textile dust control filter
- Centralized greasing system
- Rear view camera
- Pneumatic driver seat

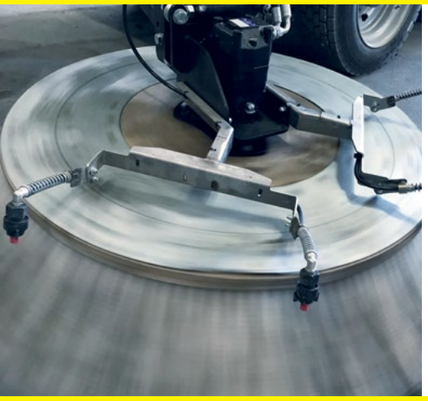

OPTIONAL CONFIGURATION

- High dump up to 94" (2,400 mm)
- 3rd front brush
- Water dust control
- High pressure washing
- Wander hose
- Brush covers
- Working view cameras
- 3 seat cabin
- Microfiber dust control green filter
- Automatic greasing system
- Radio set

TECHNICAL DATA

Technical Data

	MCM 600
Sweeping system	Mechanical - suction - filtering
Drive/Engine	Cummins four-cylinder diesel engine (model F.38)
Power	156 HP (115 kW)
Emission standard	Tier 4 Final
Traction	Automotive hydrostatic traction
Steering	Four-wheel steering
Cabin	Pressurized cabin with heating and A/C system, 3 seats
Collection system	Central cylindric broom + 2 side brushes, vertical belt conveyor
Suction system	2 hydraulic turbines
Filtering system	Polyester filter, hydraulic filter shaker
Waste hopper capacity	7.8 cu. yd. (6 m^3)
Waste hopper	High rear dump, 52" (1,340 mm) *(optional: 94" (2,400 mm)*
Brakes	Hydraulic brakes, front and rear hydraulic disc brakes
Sweeping width (2-brush system)	102" (2,600 mm)
Sweeping width (3-brush system)	142" (3,600 mm)
Working speed	12 mph (20 km/h)
Driving speed	25 mph (40 km/h)
Dimensions*	233" x 83" x 116" (5,924 mm x 2,115 mm x 2,940 mm) (length x width x height)
Total permissable weight	26,000 lb (11,793 kg)

* depends on the version

ALL THE SOLUTIONS THAT YOU NEED

KÄRCHER MUNICIPAL
A complete product range to match all your needs, with top level performance guaranteed in any condition and custom configurations for all specific purposes.

Please contact us for more information:

USA

Kärcher Municipal North America Corp
3 Allied Drive | Suite 303
Dedham, MA
02026

Phone +1 844. 332. 3200
Fax +1 613. 443. 9600

www.kaerchermunicipal-na.com

Canada

Kärcher Municipal North America Inc
100 Bay Street
Embrun, Ontario
K0A 1W1

Phone +1 613. 443. 3200
Fax +1 613. 443. 9600

www.kaerchermunicipal-na.com

01/2020. All technical data, images and information and indicative are not binding and subject to change without notice