KÄRCHER

ELECTRIC. POWER. MACHINE.

All-electric vacuum sweeper
MC 250 e!ectric.
karchermunicipal.com

ALL-ELECTRIC. FULLY CONVINCING.

Psst! With the new MC 250 e!ectric, you can quietly and efficiently keep our roads cleaner than ever before. Zero local CO_2 emissions. With a lot of endurance, superior cleaning performance and maximum comfort.

THE BEST ON BOARD

All the performance and flexibility you need, but now more environmentally friendly than ever before: the new MC 250 e!ectric combines the proven strengths of the MC 250 with an efficient electric drive system.

Comfortable cab
- Spacious and comfortable 2-person cab
- Certified ergonomic cab
- Entry and exit on both sides

LED lighting

Individual brush control with optional inclination adjustment

Charging/battery
- 78 kWh high-performance battery
- 22 kW charging capacity

Waste container
- Large 2.5 m³ waste container
- Flow-optimised stainless steel waste container
- Standard water reclamation system including pressurised water circulation pump

Large fresh water tank, 70 gal (265 l)

Chassis
- Hydropneumatic suspension on both axles, with independent front suspension
- Unmatched steering behaviour precision with all-wheel steering

Drive
- Efficient electric drive
- Low noise emission

More information about the all-electric traction drive can be found from page 20 onwards.

ALWAYS ON THE RIGHT TRACK

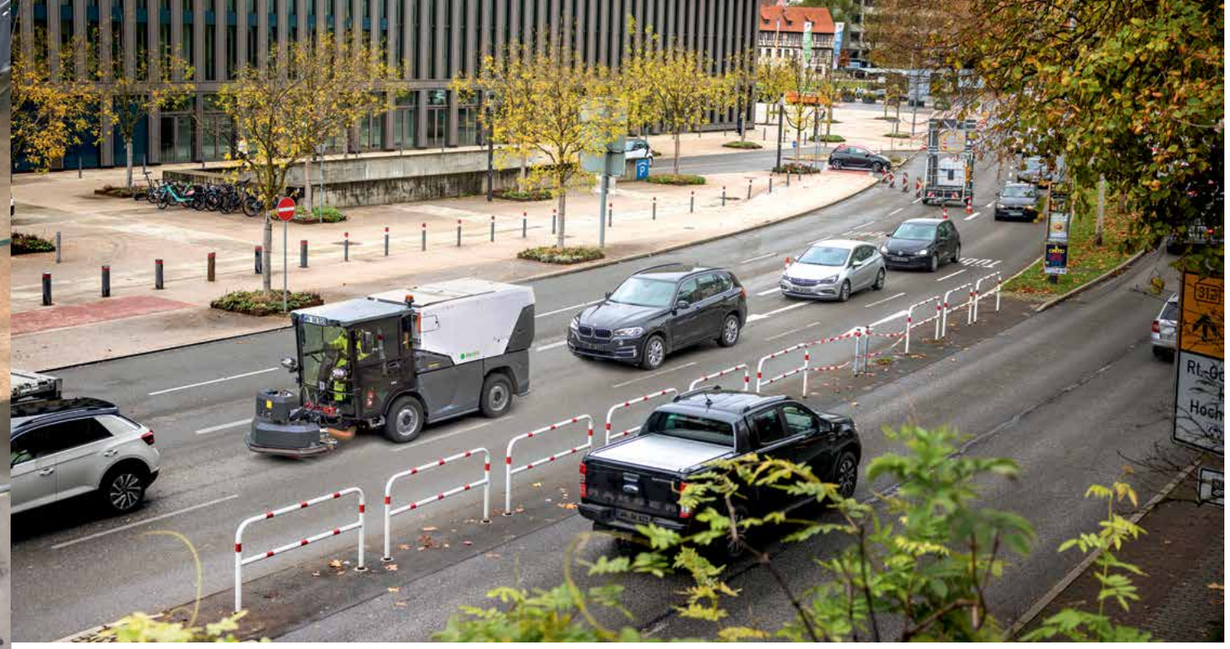

Great at sweeping, great to drive: thanks to its superior cleaning performance and high transport speed, the MC 250 e!ectric allows for a productive working day.

With the MC 250 e!ectric, you will always perform well – whether it's at work or on the way there. High-quality drive and chassis components are responsible for ensuring good performance. For example, suspension that ensures high driving comfort in all areas of application and a safe driving experience at all times. Or all-wheel steering that makes manoeuvring in confined spaces simple. On top of that, the driving dynamics are reminiscent of cars: agile, manoeuvrable and simply superior.

Comfortable suspension
Hydropneumatic suspension on both axles and in dependent front wheel suspension give the MC 250 e!ectric unmatched precision in steering be haviour and suspension comfort that compensates for every bump on the road.

Fast on the track
With a maximum transport speed of 32 km/h, the MC 250 e!ectric takes you to your next location quickly. Without being a hindrance to other road users in flowing traffic.

Highly manoeuvrable
Thanks to the switchable all-wheel steering, you can turn in one go on a two-lane road when working. This saves time and avoids risky turning manoeuvres.

PERFECT VIEW

Comfort, space and ergonomics are the ingredients for safe and relaxed work. These are present in abundance in the MC 250 e!ectric.

Your new workspace:
- Spacious and comfortable 2-person cab
- Heated air-suspended driver's seat
- Back-friendly working, AGR-certified
- Perfect all-round view
- Integrated heating and automatic air-conditioning unit
- Entry and exit on both sides with large sliding windows
- Self-explanatory operating concept with central display and ergonomically designed control panel
- ROPS-certified cab

FLAWLESS CLEANING

The MC 250 e!ectric picks up even the coarsest dirt from the road. Equipped with 2 or 3 brushes, individual brush control, an extra-wide pick-up head and an automatic coarse dirt clap, it delivers impressive results for all cleaning tasks in urban areas.

MORE THAN JUST SWEEPING

The MC 250 e!ectric can also be used as a multifunctional implement carrier. See more information on page 18.

MC 250 E!ECTRIC WITH TWO-BRUSH SYSTEM

The sliding two-brush system has individual brush control for independent control of the brush arms. The unique parallelogram guide ensures the ideal alignment of the sweeping surface at all times and thus perfect cleaning results.

Highlights and specifications:

- Sweeping width up to 103” (2,625 mm)
- Maximum brush range
- Water spraying reduces dust dispersal
- Separately controlled brush relief and speed
- Angle adjustment to adjust the right or left side brush (option)
- Maximum start-up protection

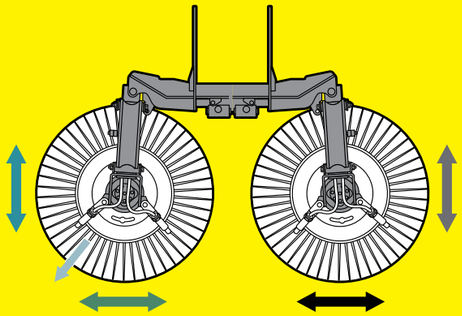

Individual brush control

Brush relief right/left

Brush angle adjustment (option)

MC 250 E!ECTRIC WITH THREE-BRUSH SYSTEM

The three-brush system enables flexible work with a sweeping width of up to 107” (2,710 mm) – that means, for example, that you can clean the full width of a cycle path in one go. Its strengths include a system optimised for city centres, in particular when sweeping niches and when working at different levels. Weeds can also be effectively removed from the edge of the road by attaching a weed brush to the third brush arm.

Highlights and specifications:

- Sweeping width up to 107” (2,710 mm)
- Possible to work at two levels
- Possible to work over large areas thanks to lateral displacement
- Distance between the brush and the machine is always the same
- Sweeping direction can be changed from the cab
- Sweeping surface can be adjusted easily
- Weed brush

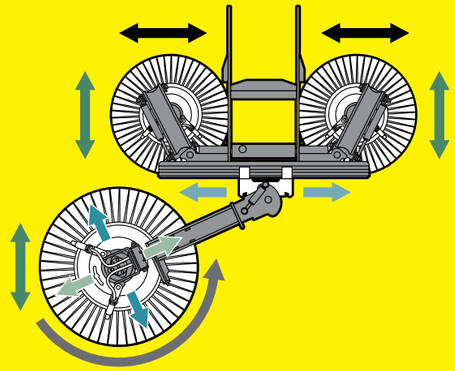

Sweeping width adjustment

Individual speed adjustment

Brush relief

Brush angle adjustment

Pitching

Side shift

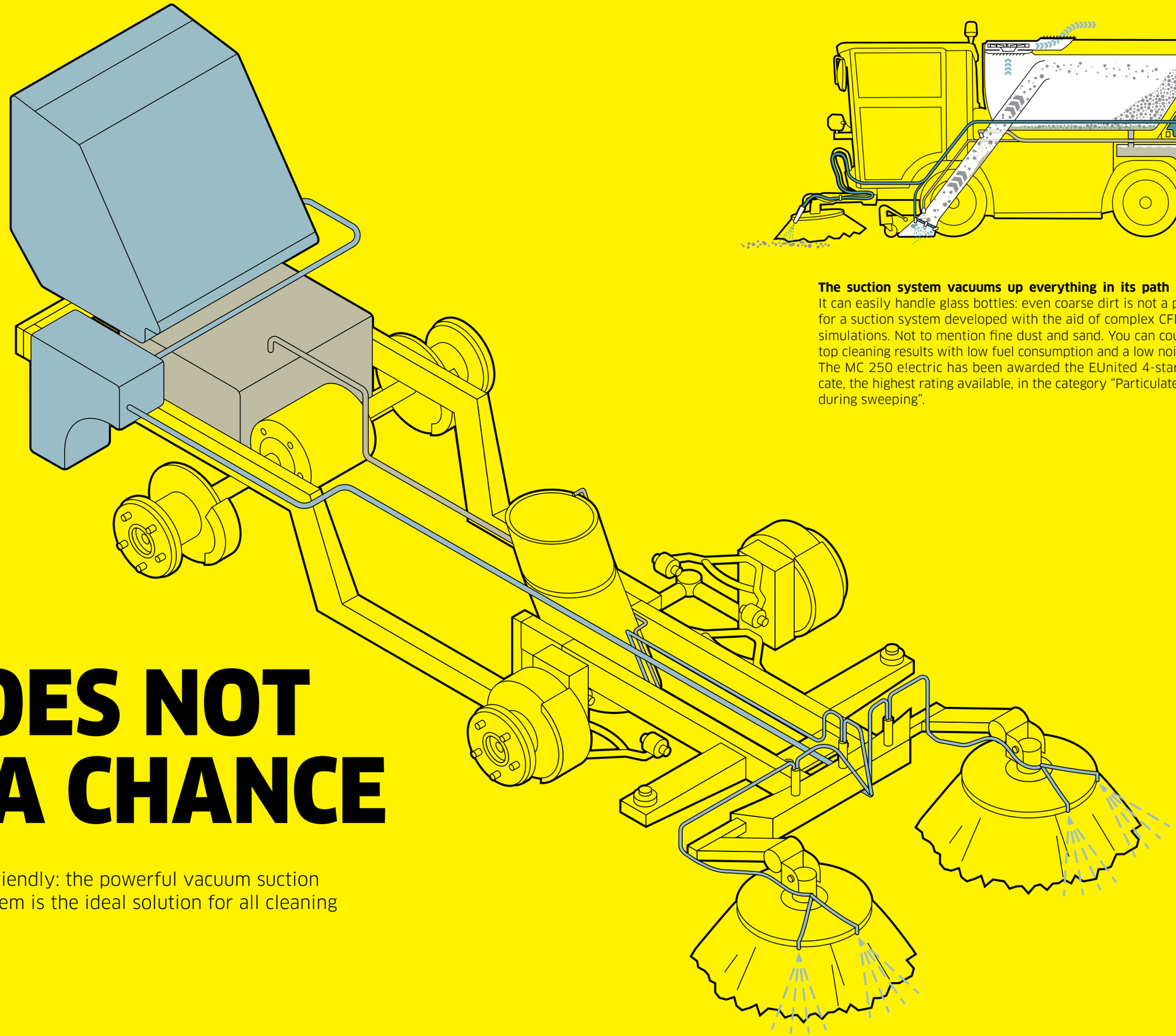

Save time and water
The MC 250 e!ectric has a water circulation system with separate dirt water tank as standard. Longer work cycles are possible thanks to the considerably lower fresh water consumption. And you save additional time with fewer refueling trips.

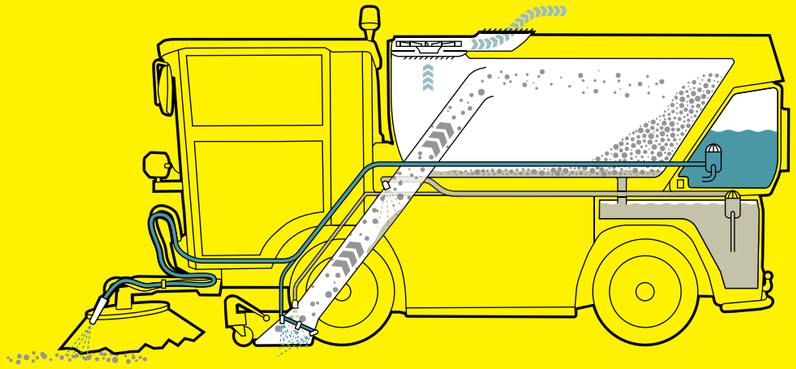

The suction system vacuums up everything in its path
It can easily handle glass bottles: even coarse dirt is not a problem for a suction system developed with the aid of complex CFD flow simulations. Not to mention fine dust and sand. You can count on top cleaning results with low fuel consumption and a low noise level. The MC 250 e!ectric has been awarded the EUnited 4-star certificate, the highest rating available, in the category “Particulate matter during sweeping”.

DIRT DOES NOT STAND A CHANCE

Efficient, quiet, environmentally friendly: the powerful vacuum suction system with water circulation system is the ideal solution for all cleaning work in urban areas.

BIGGER IS BETTER

Ample capacity: the enormous waste container is another highlight of the MC 250 e!ectric.

Largest waste container in its class
A volume of 3.27 cubic yards (2.5 cubic metres): the stainless steel waste container of the MC 250 e!ectric allows for a longer operating time before unloading is required and enables greater utilisation. And all this with a machine width of only 51 inches (1.30 metres) and a height under 79 inches (2 metres) – quite an accomplishment!

Very simple emptying
Thanks to the emptying height of 63 inches (1,600 mm), you can conveniently empty the waste container directly into standard containers, trailers and flatbeds, thus saving time. Teamwork in the city centre instead of driving to the waste depot – perfect with the MC 250 e!ectric.

Space for tanks and spreaders
Practical and clever: the waste container can be set down with the aid of stands. This allows other implements to be attached if required, for example a water tank for watering jobs or a spreader for the winter service.

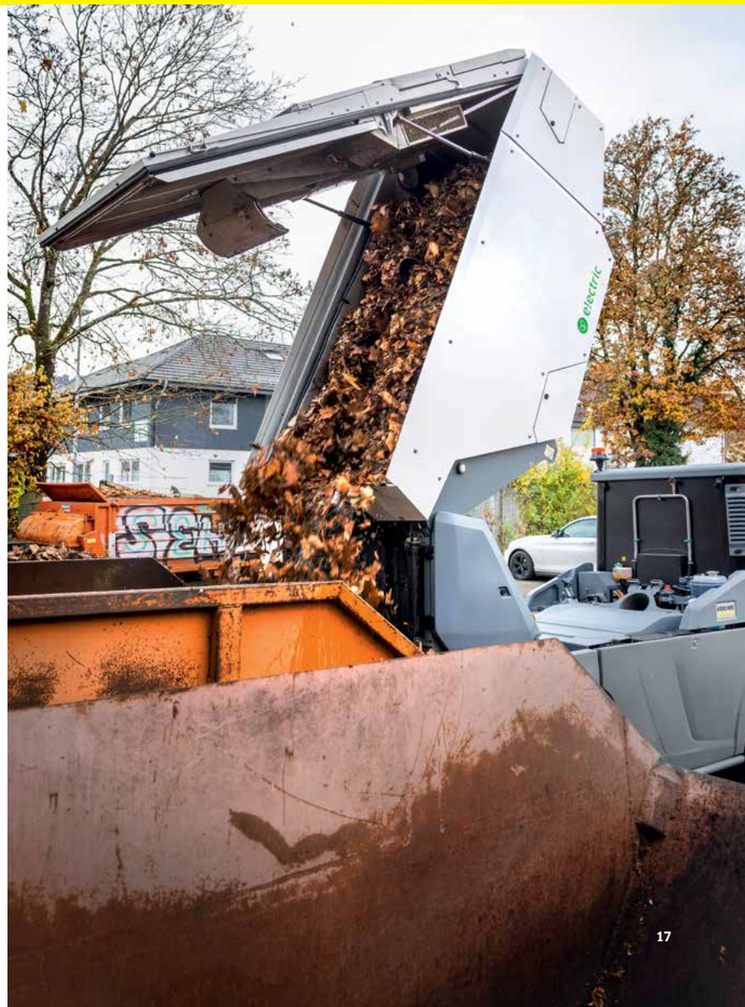

PACKS QUITE A PUNCH

Do you need a bit more than just sweeping? If so, the MC 250 e!ectric will more than satisfy you.

Three implement interfaces, high lifting force and high payload make the machine a versatile implement carrier – the result is a significant increase in applications and productivity.

Implement carrier highlights:

- Versatile fields of application
- Several separate hydraulic circuits for controlling several implements
- Free selection of implements thanks to standardised three-point support CAT 0 and CAT 1

High pressure on board
For selective cleaning of park benches, road signs or the machine itself, an optional professional Kärcher high-pressure cleaner with 10-metre hose is also available.

Watering, scrubbing
Expand your spectrum of use with a spray bar for the gentle removal of hardened dirt, a scrubbing deck or a watering tank.

Tackle weeds
You can effectively remove weeds at the edge of the road by attaching a weed brush to the third brush arm – this is effective across the entire width of the machine thanks to the sliding rail.

Gets into every corner
The wander hose with water inlet for dust suppression is essential for removing dirt in hard-to-reach areas, such as beside park benches, on stairs, etc.

POWER. ENDURANCE. QUIETNESS.

Superior sweeping, zero motor emissions, low-noise sweeping operation: the efficient electric drive of the MC 250 e!ectric heralds a new era in sustainable urban cleaning.

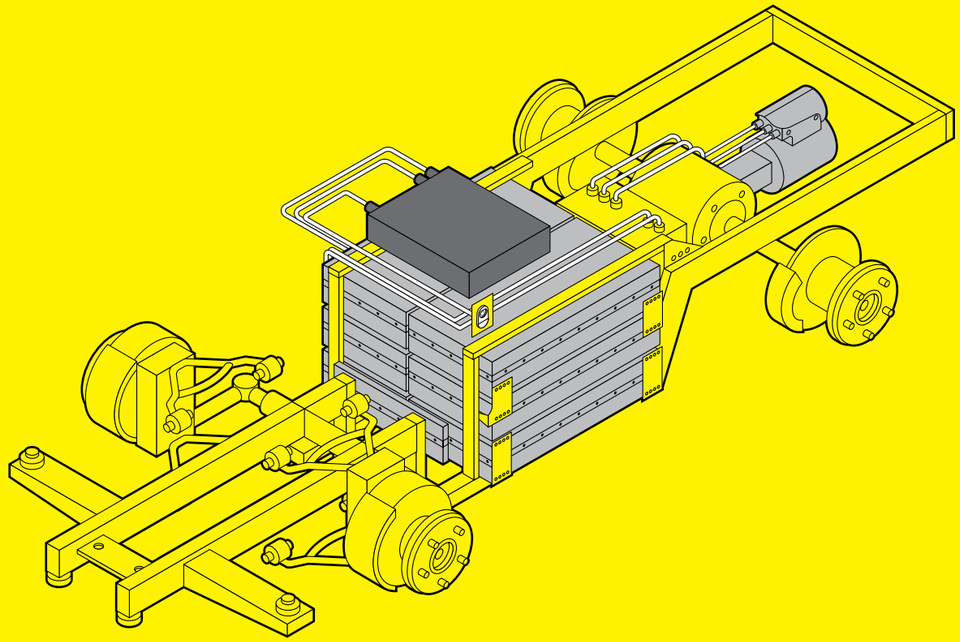

THE NEW E-FFICIENCY

A full shift with electricity: with its large range, the new MC 250 e!ectric not only does away with dirt but also dispels any doubt about electric vehicles.

High-torque electric drive motor and efficient e-motors for hydraulics and fan, 78 kWh high-performance battery, efficiency-optimised complete system. The key specifications of the MC 250 e!ectric impress on paper – and above all on the road.

During long work days it reaches its full potential quietly, with persistence and zero emissions. For up to 10 hours. At up to 20 mph (32 km/h), it always arrives at the next location quickly. And after work it is quickly ready for operation again thanks to its 22 kW charging capacity.

Rapid charging
The on-board charger supports charging capacities of up to 22 kW and can be connected to wall boxes and charging stations with conventional type 2 plugs. The vehicle can be fully charged in approximately 4 hours.

Psst! No unwelcome surprises
No more undesired wake-up calls: the MC 250 e!ectric cleans the roads so quietly that it is possible to sweep at night and in the early morning, as well as in noise-sensitive areas such as schools or hospitals.

Allows you to go further: recuperation
The MC 250 e!ectric can recover some of the energy used for driving through recuperation. The range can be increased considerably, particularly with an anticipatory style of driving. The degree of recuperation can be set to several levels.

FINE PERFORMANCE

Sweeping roads, cleaning paths and pedestrian zones: the MC 250 e!ectric is there for you from morning to night. Efficient, reliable, quiet and with zero emissions.

TECHNICALLY BRILLIANT

Compact dimensions meet great functionality and a sustainable drive: bring the future to your fleet.

All-electric vacuum sweeper MC 250 e!ectric

Technical highlights	■ Electric traction drive with optional differential lock ■ Continuous output 88 HP/ peak 122 HP (65 kW/peak 90 kW) ■ 78 kWh battery capacity ■ Hydropneumatic suspension ■ Switchable all-wheel steering
Drive/motor	High-efficiency asynchronous electric motor
Driving speed	20 mph (32 km/h)
Climbing ability	up to 30%
Turning radius	81" (2,060 mm) (inner) 204" (5,189 mm) (curb to curb) 269" (6,820 mm) (wall to wall, 2-brush system)
Dimensions (L × W × H)	167" × 51" × 79" (4,248 mm × 1,300 mm × 1,995 mm) (carrier vehicle) 177" × 51" × 79" 4,491 mm × 1,300 mm × 1,995 mm (2-brush system)
Permissible total weight	13,228 lb (6,000 kg)
Towing capacity (braked)	6,614 lb (3,000 kg)
Unladen weight	6,459 lb (2,930 kg) (carrier vehicle) 8,951 lb (4,060 kg) (2-brush system) 9,326 lb (4,230 kg) (3-brush system)
Hopper volume	3.27 cu. yd. (2,500 l)
Fresh water tank	70 gal (265 l)
Maximum sweeping width	103" (2,625 mm) (2-brush system) 107" (2,710 mm) (3-brush system)

QUICK AND EASY SERVICING

A service-friendly design equals a well-kept machine and low operating costs – and it pays off with the MC 250 e!ectric.

Easy maintenance and repair
Easy servicing is a cost factor that should not be underestimated. The well-thought-out design of the MC 250 e!ectric enables simple and fast vehicle care, which leaves more time for important matters. All components for daily maintenance and repair can be easily reached via service flaps.

Well thought out
What's easy to clean is cleaned more often – and this extends the service life. This is why radiators and condensers are easily accessible. The waste container can be easily cleaned with a water hose thanks to smooth surfaces and large sieve openings. Openings on both sides also enable easy cleaning of the water reclamation system while the waste container is in a lowered position.

Tool-free access
Nothing gets in your way: tool-free access to the spray and cooling water tanks simplifies maintenance and inspection. The charging connection with integrated indicator lamp is also easily accessible, which makes the charging processes simple and saves time.

WHAT IF THE FUTURE CHANGES TOMORROW?

No matter how radically your tasks change, we can help you to keep up with the challenges ahead. Just reach out to us to reach for the stars.

Nothing can stop you.
With Kärcher Services.

More information about our top services can be found at karcher.com

- rental
- used
- financial solutions
- service packages
- all brands service
- cleaning consulting
- service app
- original spare parts
- visual remote support

SERVICES THAT WE CAN BE PROUD OF

Maintenance and repair
Our experienced and qualified personnel carry out maintenance and repairs quickly and professionally – regardless of whether mechanical, electrical or hydraulic work is required. Service staff attend regular training events and pursue qualifications, ensuring that every task carried out on your Kärcher or Holder vehicle is done correctly. In this way, we guarantee you fast and smooth maintenance and repair.

Complete overhaul
Do you already have a Kärcher or Holder vehicle and would like to have it reconditioned, or have you had an accident? We will not let you down! In our own Kärcher Municipal service centres, we carry out even the most extensive complete overhauls.

Air conditioning service
We offer professional cleaning of your air conditioning system as well as regular maintenance and repair. In this way, you ensure flawless operation, increase the service life of your air conditioning and keep a cool head at all times, even in hot temperatures!

Official inspections
We are happy to take care of the official inspections of your Holder or Kärcher vehicle and the corresponding implements, such as the main inspection* and the safety inspection, in accordance with the accident prevention regulation (UVV Inspection). Make an individual appointment at our service workshops.

On-site service
The workshop comes to you with our qualified and trained service technicians who possess the necessary know-how and expertise. The service vehicles are well equipped with diagnostic devices and tools, so nothing stands in the way of customer service or repair on your premises. What's more, in the winter season, we offer a 24/7 on-call service.

Collection and delivery service
Whether you have broken down or maintenance or repair work is required – we will collect your Kärcher or Holder vehicle for you and bring it back to you after the repair. Alternatively, we can commission a forwarding agency and organise the transport for you, so you don't have to worry about it yourself.

Warranty
You have the option to extend your warranty up to 36 months.
We would be happy to advise you.

* We carry out the main inspection in cooperation with an officially recognised inspection organisation.

THE RIGHT MACHINE AT THE RIGHT TIME

Kärcher Municipal offers you a complete vehicle portfolio with a wide variety of models. From the standalone sweeper through to the ultra-versatile implement carrier. With performance classes to meet every requirement. **Kärcher Municipal offers you solutions for every task.**

Discover our all-rounders at karchermunicipal.com

makes a difference

We would be happy to advise you:

Germany

Kärcher Municipal GmbH
Mahdenstraße 8
72768 Reutlingen

Phone +49 7121 930729-0
Fax +49 7121 930729-213

info@municipal.karcher.com
www.karcher-municipal.com

USA

Kärcher Municipal
North America Corp.
3 Allied Drive
Suite 303
Dedham, MA 02026

Phone +1 844 332-3200
Fax +1 613 443-9600

www.kaerchermunicipal-na.com

Canada

Kärcher Municipal
North America Inc.
100 Bay Street
Embrun, ON
K0A 1W1

Phone +1 613 443-3200
Fax +1 613 443-9600

www.kaerchermunicipal-na.com

United Kingdom

Kärcher (UK) Ltd
Kärcher House
Brookhill Way
Banbury
Oxon OX16 3ED

Phone +44 1295 752-000
Fax +44 1295 752-103

www.karcher.co.uk

Ireland

Kärcher Ltd (Ireland)
Unit 3, Redcow Retail Centre
Robinhood Road
Ballymount, Dublin 22
D22 PY03

Phone +353 1 409-7777
Fax +353 1 409-7775

www.karcher.ie

India

Kärcher Cleaning System Pvt. Ltd.
A-42/4, Sector-62
Noida - 201 309
Uttar Pradesh

For Sales queries:
info.in@kaercher.com
For Service queries:
service.in@kaercher.com
www.karcher.com/in

South East Asia

Karcher Singapore Private Limited
3 Depot Close, #01-01
Singapore 109840

Phone +65 6897 1811

For Service enquiries:
service-sg@karcher.com
For Sales enquiries:
sales-sg@karcher.com
www.karcher.com/sg/

Karcher Limited Taiwan
No. 502 Yuanshan Road
Zhonghe District
New Taipei City
Taiwan 23545

Phone +886 2 2221-0698
Fax +886 2 2221-1695

www.karcher.com/tw/

Australia

Karcher Pty Ltd
385 Ferntree Gully Road
Mount Waverley
Victoria, AU 3149

Phone 1800 675-714
(Free Call)

www.karcher.com.au

New Zealand

Karcher Ltd
66 Allens Road
East Tamaki
Auckland 2013

Phone +64 9 274-4603
Fax +64 9 274-6932

www.karcher.co.nz

North Africa

Kärcher SARL
Immeuble Yasmine Tower
Bloc A 6ème étage, bureau A 6.6
Centre Urbain Nord
1082 Tunis
Tunisia

Phone +216 36339020

info@tn.karcher.com
www.karcher.tn

East Africa

Kärcher Limited
Muthangari Drive
P.O. Box 40111-00100
Nairobi
Kenya

Phone +254 700085927

info@ke.kaercher.com
www.karcher.com/ke

South Africa

Karcher (Pty) Ltd
P.O. Box 1509
2 North Rand Road
Hughes Ext 72
Boksburg
1459
Johannesburg

Phone +27 11 657-7300
Fax +27 11 657-7440

www.karcher.co.za

Middle East

Karcher FZE
Quality Cleaning Systems
Jebel Ali Free Zone
Plot No. S-10104 South Zone
RA 08, XB 1, Jebel Ali
Dubai

Phone +971 4 886-1177
Fax +971 4 886-1575

customercare@ae.karcher.com
www.karcher.ae

Optimal advice, sales and service with your Kärcher Municipal partner:

MI/Po · 03/2025 · Order no. 0.028-794.0 · Subject to modifications. Errors and omissions excepted. Illustrations similar.