KÄRCHER

makes a difference

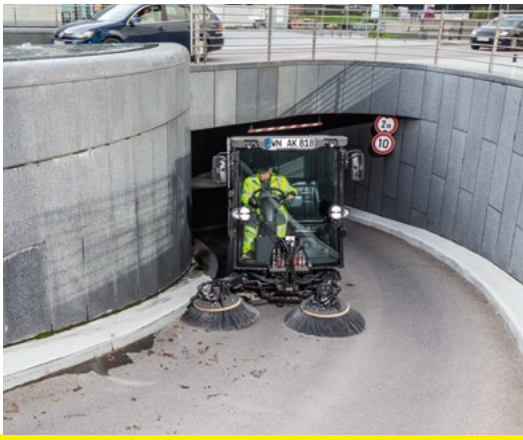

# THE NEW MC 250. THE SWEEPER THAT HELPS MUNICIPALITIES.

Impressive cleaning performance also in environmental zones

# GO CRAZY FOR THIS MACHINE!

When performance, flexibility and environmental friendliness are what you want, then our MC 250 is the vacuum sweeper that matches your requirements. It has everything you need for fulfilling your cleaning tasks. At all times. In any location.

We asked experts from the municipalities to test drive various vehicles and incorporated their feedback directly into the development of the MC 250. This allowed us to make the MC 250 what it is: the optimal solution for municipalities.

A reliable, durable vacuum sweeper with outstanding performance, which meets the highest requirements in terms of cleaning results, safety and comfort. And which has already been tried and tested in all applications during the development stage.

# CUTTING-EDGE TECHNOLOGY WHEREVER YOU LOOK

We want to impress everyone with our MC 250: operations managers, drivers, workshop employees and everyone who handles this machine. We equipped the MC 250 with the most innovative technology and superior comfort and added a clever service concept that has been properly thought through down to the smallest detail. Because we are only happy when you are happy. You will experience satisfaction in every operation, also in urban environmental zones. And you will be amazed over and over again.

**Large comfort cab for two persons**

**Intuitive operating concept includes quick-start button and display integrated into the steering wheel**

**20 mph (32 km/h) maximum speed**

**Individual brush control with optional angle adjustment**

**Hot-dip galvanised vehicle frame**

**Largest waste container in the 2 m³ class**

**Drive complying with Tier 4 Final**

**Hydro-pneumatic suspension on both axles**

**Independent front-wheel suspension**

**All-wheel steering system**

# DRIVING DYNAMICS REDEFINED

No compromises. Those who want the best overall cannot be fussy about the detail. We also equipped the MC 250 with top-quality components for the drive and chassis and suspension. For driving dynamics previously only found in cars.

Like all Kärcher municipal sweepers, the MC 250 combines compact dimensions with robust quality and a powerful drive with the highest possible environmental friendliness. The hot-dip galvanised frame is corrosion-free and has been tested in endurance tests.

With its high driving speed, the hydro-pneumatic suspension and quick access to all service components, you are always prepared and ready faster with your MC 250.

**MC 250 Express: 20 mph (32 km/h)**
With a maximum driving speed of 20 mph (32 km/h) the MC 250 takes you to the next operation site quickly and safely. Without being a hindrance to other road users in flowing traffic. As a result, unproductive times are reduced considerably and the operator can spend more working time on his primary task, sweeping.

**Exemplary: comfort and chassis**
Whether it's sweeping or during transportation – your MC 250 ensures a safe driving experience at all times, giving you the ride comfort of a car. For that to happen, we equipped the MC 250 with a hydro-pneumatic suspension on both axles and an independent front-wheel suspension. This lends the MC 250 unparalleled precise steering behaviour and suspension comfort, which softens every bump.

**Maneuverability: all wheels steer with you**
When you activate the switchable all-wheel steering during operation, you can turn on a road with 2 lanes with your MC 250 in one go. You mainly benefit from this extreme maneuvrability in the city centre. This saves you lots of time and avoids dangerous turning maneuvres.

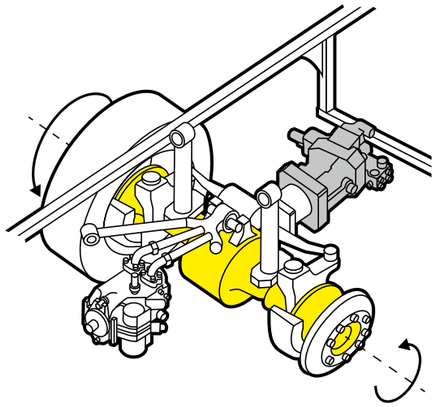

# CLIMB IN AND FEEL HAPPY

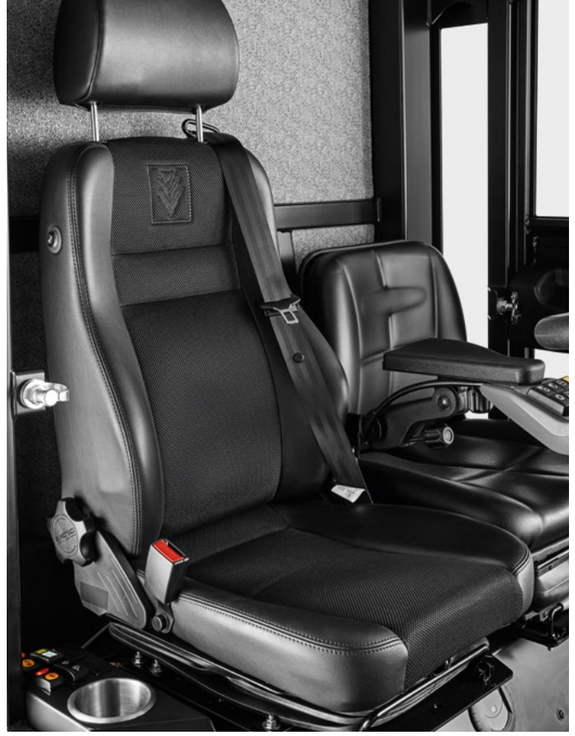

Those who spend their working hours almost entirely in a vehicle should be relieved with maximum ergonomics and comfort. The MC 250 offers a modern workstation, which supports concentration on the activity and the surrounding area and protects the driver's health.

**Everyone sits perfectly**
The spacious two-seater cab offers a generous workstation with a pleasant spatial feeling also for tall individuals with comfortable leg room. Everything is designed to protect the back, from climbing in and the suspension comfort through to the air-sprung driver's seat with lumbar support, seat heating and 3-point seat belt. The comfort driver's seat from the premium manufacturer König is certified by the employers' liability insurance association. The machine with the particularly back-friendly workstation and sitting comfort like in a truck was awarded with the AGR seal of quality by an independent body of doctors and physiotherapists.

**View: perfect**
The very large, sloping windscreen of the MC 250 gives you a perfect view of the work environment and reduces direct sunlight. Large sliding windows on both sides which can be opened to the front and back make it easier for you to adjust the side mirror and open compartments.

**Operation: the very best**
The central display integrated in the steering wheel hub makes an important contribution to occupational safety. Because the display is always in the driver's field of vision, the driver can concentrate fully on the work environment. The ergonomic operating panel, which we already use in our MIC 42 and MC 130, offers you a consistent, self-explanatory operating concept with symbols that are easy to understand, like the Kärcher Eco button: at the touch of a button, the MC 250 automatically goes into its work position. This saves time and ensures safety.

# TWICE AND THREE TIMES AS GOOD

There are good solutions and there are very good solutions. If you prefer perfect solutions, the MC 250 is perfect for you. It offers so much more and makes everything so much better than you have known up to now.

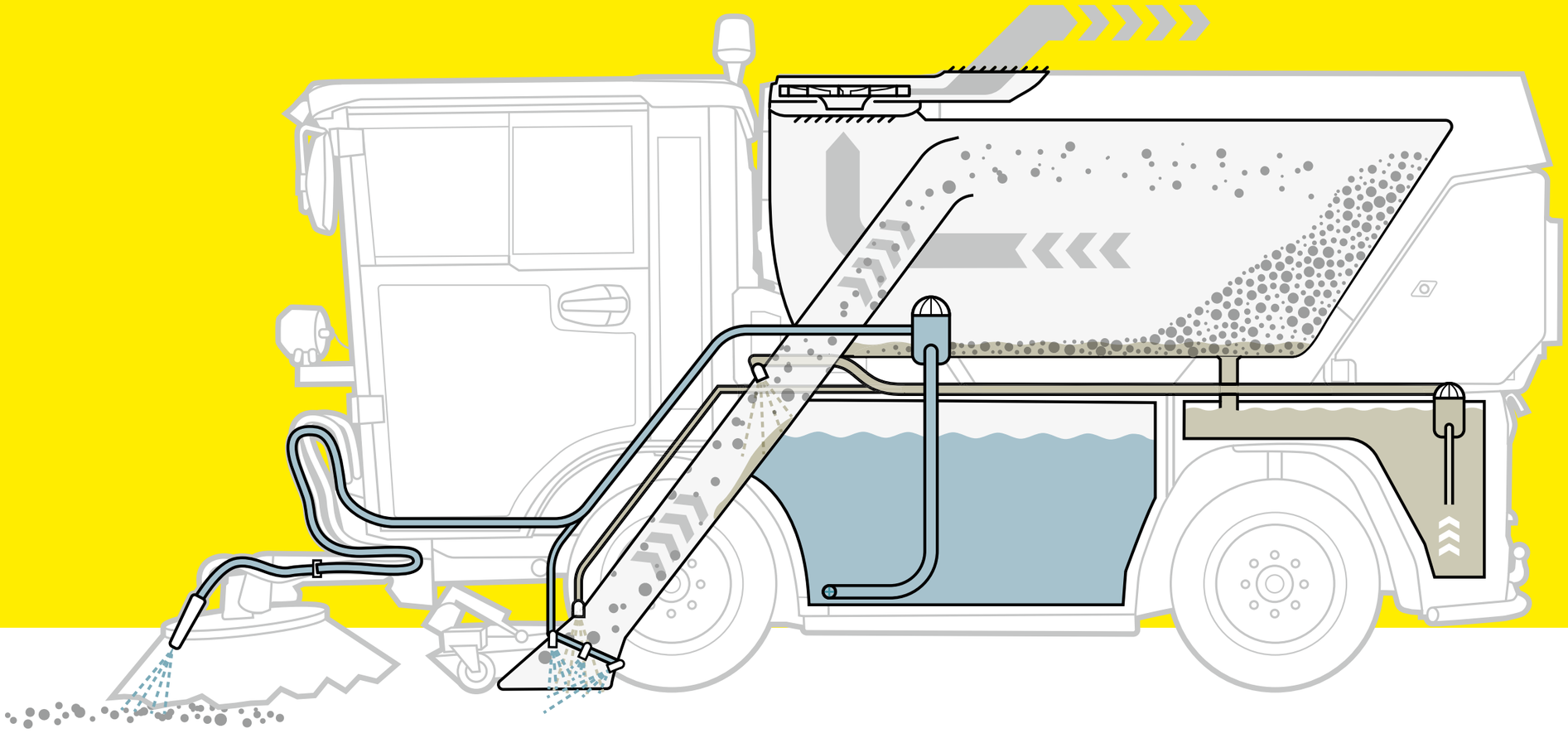

With your MC 250 you not only have a modern sweeper, but the ideal solution for all cleaning work in the city centre area. Use the MC 250 on footpaths and cycle tracks, in industrial areas or car parks or wherever. You will be so impressed by the results, especially in terms of comfort and safety. Numerous optional implements open up additional applications, e.g. clearing and spraying in winter service, wet cleaning, high-pressure cleaning and weed removal. Always reliable, efficient and with superior results.

**Calculation on the computer: sweeping system**

We designed the sweeping system using CFD technology. In this way, we have ensured that the high-quality, efficient fan generates the perfect vacuum, the air flow passes optimally through the container, suction pipe and suction mouth and the dirt can be picked up efficiently. Positive side effects include a pleasant noise level and low fuel consumption.

# THE DIRT IS GONE – NO MATTER HOW

**Whichever you need: 2 or 3 brushes**
Configure the brush system of your MC 250 as needed. The sliding 2-brush system has individual brush control for independent control of the brush arms. The parallelogram guide ensures even wear of the brushes and therefore a longer service life. The brushes can be extended far outside the vehicle contour, almost perpendicular to the side window, which opens up unprecedented applications. The optional angle adjustment of the brush allows you to adapt the brush angle to the ground for a perfect sweeping result and low brush wear.

There are fresh water nozzles on every brush and fresh and dirty water nozzles in the suction mouth for optimal dust binding. This means that you can also use the MC 250 in dust-sensitive areas of city centres, hospitals and car parks without any hesitation. The optional 3-brush system extends the sweeping width and allows you to work on different levels. Attach the weed brush on the 3rd brush arm to remove weeds at the roadside. And beyond the entire width of the machine, thus allowing you to clean the full width of cycle paths in one go.

**Open to everything: the suction system**
The suction system also easily picks up very coarse dirt. So that such items can also be easily picked up, the MC 250 has an 31” (800 mm) wide stainless steel suction mouth with automatic coarse dirt flap. Extremely coarse dirt reaches the waste container via the straight suction channel with 8” (200 mm) diameter without any risk of blockages. If required, the suction mouth can be raised continuously, e.g. in autumn for large amounts of leaves. You will also no longer want to go without the intelligent crossroads function: if you have to cross a crossroads at high speed during the work, a simple touch of a button is all that is needed to raise the complete brush system.

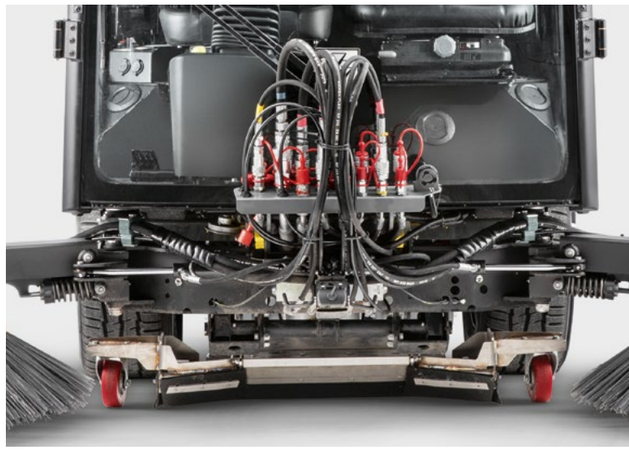

# LARGER, TALLER, MORE ECO-NOMICAL

The difference between a powerful sweeper and our MC 250 is huge. From the waste container and the emptying height through to the computer-optimised suction system. This means that you can reach the full potential. Always and everywhere.

**The biggest in its class: waste container**
With the massive container volume of 2.87 cu. yd. (2.2 m³), the MC 250 allows you to extend the operating time up to emptying and makes a higher utilisation rate possible. The MC 250 is only 4.26 feet (1.30 metres) wide and less than 6.56 feet (2 metres) high. And because it looks better and lasts longer, the waste container is made entirely from stainless steel.

**Very simple: emptying**
Thanks to the emptying height of 53” (1,600 mm), you can empty the waste container comfortably directly into containers, trailers and flatbeds, thus saving time. Teamwork in the city centre instead of driving to the building yard – perfect with the MC 250.

**Pressure circulation: water system**
The MC 250 has a water circulation system with separate dirty water tank in the carrier vehicle as standard. Longer work cycles are possible thanks to the considerably lower fresh water consumption. And you save additional time with fewer tank journeys. You can adjust the pressure water pump of the circulation system in the cab to flow rates between 2.64 gpm (10 l/min) and 15.9 gpm (60 l/min). In wet weather or in the rain, you can drain the water collected via the water circulation tank, thus optimising the capacity for waste.

**Detachment made easy: waste container**
Experience practical multifunctionality. The waste container can be set down using support arms. Then you can install a water tank for watering jobs or weed removal with hot water or a spreader for winter service.

# EVERY-THING THAT YOU WANT

One better than the other. And always the right tool for your requirements. This is what our municipal machines want to be for you. And they are.

**No compromises**
Don't ask what a municipal machine can do in order to choose the one that comes closest to your requirements. Choose the machine that can do everything that you need. And can do so with perfection. We developed our municipal machines so that all options are available in order to adapt your machine perfectly to your needs. Also for relaxed, focused work with useful equipment, such as climate control and the comfort driver's seat with 3-point seat belt.

**Kärcher makes the difference**
Our municipal machines and accessories are sophisticated, reliable and comfortable implements which allow you to complete all municipal cleaning tasks effectively and efficiently. No matter which model you choose, you get effectiveness, efficiency and durability. And you benefit from the quality of the global leader in cleaning technology.

**Equipped for every task**
Sweeping differs from one application to the next. And sweeping is by no means everything. Our municipal machines offer and can do a good deal more. The wander hose with water inlet for dust binding is essential for removing dirt in places that are difficult to access, e.g. beside park benches, on staircases, etc. You can use our 2-brush system with individual brush control, as well as the 3-brush system, extremely flexibly, also, for example, for removing weeds. And numerous other applications are possible with the high-pressure cleaner on board.

# YOUR PASSION FOR THE ENVIRONMENT

Our municipal machines not only clean the roads, but also make an active contribution to a better environment. With clean, economical and quiet engines and low water consumption.

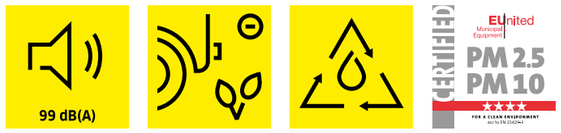


**Latest generation of engines**
Our powerful engines with diesel particulate filter (DPF) and urea injection comply with the requirements of the exhaust emissions standard Tier 4 Final. This means that our municipal machines meet all requirements for operation in environmental zones.
The exhaust gas treatment with AdBlue® reduces particulate matter and $CO_2$ emissions to the lowest possible level.

**Top marks in particulate matter**
In the PM2.5 particulate matter test of the EUnited (European Engineering Industries Association), our engines achieved the highest rating of 4 stars.

**Power can also be quiet**
The noise level of our municipal machines is pleasantly quiet not only in the cab for the driver, but also for pedestrians in the immediate vicinity. In Eco mode at only 99 dB(A) you can also easily sweep at night and in the early morning.

**Save lots of water as well as time**
The water circulation system reduces the fresh water requirement considerably, whereby you not only save water and costs, but at the same time reduce the environmental impact and work more productively thanks to longer work intervals.

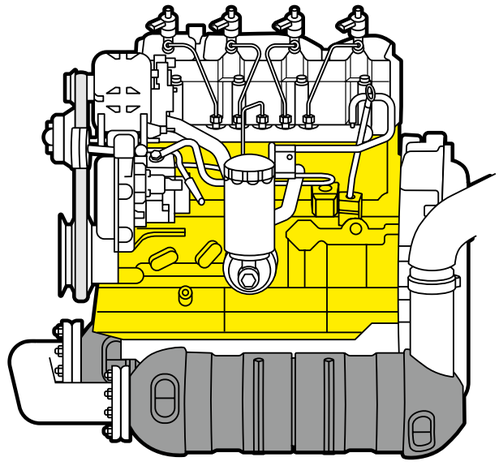

# MAINTENANCE IS A WIN-WIN SITUATION

Every machine needs maintenance and care in order to work continuously and without any faults. It's good that you have an easy time of it with our municipal machines.

**Simple because it is important**
The serviceability is a central objective in the development of our products. Our municipal machines have numerous service flaps for quick access to the technology. So that all daily or regular inspections and service work are carried out quickly and simply.

**Access without tools**
For ready access to the engine and diesel particulate filter the fresh water tank can be swivelled to the side. This gives you quick access without the need for any tools, and nothing stands in your way. What service technicians dream of is part of everyday life for Kärcher municipal machines. And the time savings also mean lower costs.

**Protection against dirt**
You must be able to at least easily remove dirt that cannot be avoided. Simple cleaning of the vehicle is therefore important. For quick cleaning, the radiator, for example, is accessible from the outside. And between the waste container and engine there is also an engine cover to protect the electronic components against wet weather and moisture. The water circulation system can be easily cleaned when the container is set down without the operator coming into contact with dirt.

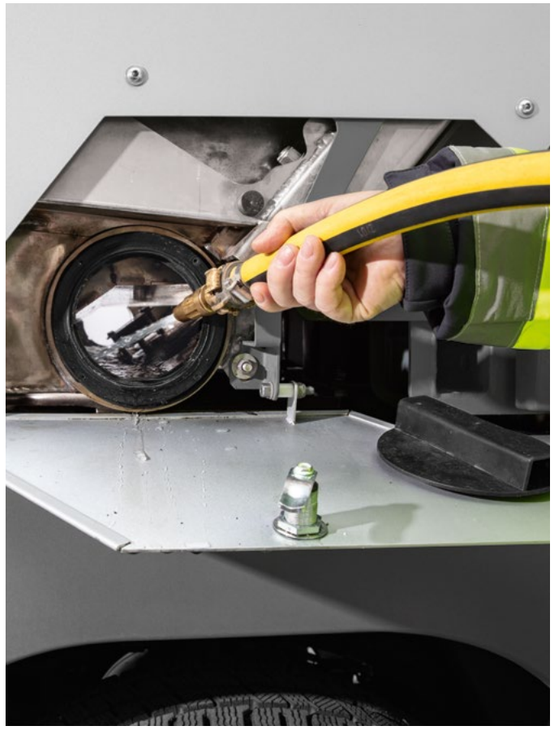

# YOU HAVE LOTS OF TASKS.
# HERE ARE THE MACHINES YOU NEED.

Let's face it: nobody can be the best at everything. That's why we developed a range of vehicles with completely different models. From the pure sweeper to the extremely versatile implement carrier. In performance classes for every requirement. With configurable implements for every purpose. And this way you definitely find the municipal machine that can do everything that you need. There you go!

Please contact us for more information:


**Head Office Germany**

Alfred Kärcher SE & Co. KG
Alfred-Kärcher-Straße 28–40
71364 Winnenden

Phone +49 7195-14-0
Fax +49 7195-14-2212

www.kaercher.com

**USA**

Kärcher Municipal North America Corp
3 Allied Drive | Suite 303
Dedham, MA
02026

Phone +1 844. 332. 3200
Fax +1 613. 443. 9600

www.kaerchermunicipal-na.com

**Canada**

Kärcher Municipal North America Inc
100 Bay Street
Embrun, Ontario
K0A 1W1

Phone +1 613. 443. 3200
Fax +1 613. 443. 9600

www.kaerchermunicipal-na.com

**United Kingdom**

Kärcher (UK) Ltd
Kärcher House
Brookhill Way
Banbury
Oxon OX16 3ED

Phone +44 1295-752-000
Fax +44 1295-752-103

www.karcher.co.uk

**Ireland**

Kärcher Ltd
Unit 4
E.P. Mooney Business Park
Walkinstown Avenue
Dublin 12

Phone +353 1-409-7777
Fax +353 1-409-7775

www.karcher.ie

**South East Asia**

Regional Head Office
South East Asia

Karcher South East Asia Pte Ltd
3 Depot Close #05-01
Singapore 109840

Phone +65 6897-1811
Fax +65 6897-1611

www.karcher.com.sg

**Hong Kong**

Kärcher Limited
Unit 01, 22/F, Westley Square
48 Hoi Yuen Road
Kwun Tong, Kowloon

Phone +852 2-357-5863
Fax +852 2-357-5632

www.karcher.com.hk

**Australia**

Karcher Pty Ltd
385 Ferntree Gully Road
Mount Waverley
Victoria, AU 3149

Phone 1800 675-714
(Free Call)

www.karcher.com.au

**New Zealand**

Karcher Ltd
66 Allens Road
East Tamaki
Auckland 2013

Phone +64 9-274-4603
Fax +64 9-274-6932

www.karcher.co.nz

**North Africa**

Kärcher SARL
Immeuble Yasmine Tower
Bloc A 6ème étage, bureau A 6.6
Centre Urbain Nord
1082 Tunis
Tunisia

Phone +216 36339020

info@tn.kaercher.com
www.kaercher.tn

**East Africa**

Karcher Limited
Regus Fortis Office Park
P. O. Box 66488-00800
Block C, Ground floor
Muthangari Drive
Westlands Nairobi
Kenya

Phone +254 205148145

info@ke.kaercher.com
www.kaercher.com/ke

**South Africa**

Kärcher (Pty) Ltd
Cnr Mount Joy &
George Allen Rd
Wilbart Ext. 2
PO Box 11818
Vorna Valley, 1686

Phone +27 11-657-7300
Fax +27 11-657-7440

www.karcher.co.za

**Middle East**

Karcher FZE
Quality Cleaning Systems
Jebel Ali Free Zone
Plot No. S-10104 South Zone
RA 08, XB 1, Jebel Ali
Dubai

Phone +971 4-886-1177
Fax +971 4-886-1575

customercare@ae.kaercher.com
www.karcher.ae

**Qatar**

Karcher LLC
Office No 133, Regus Building
D Ring Road
PO Box 35176

Phone +974 4-423-1319

customercare@ae.kaercher.com
www.kaercher.ae

**Caribbean**

Karcher S.R.L.
Calle 5ta, esq. Calle 18, Nave 1
Villa Aura
Santo Domingo Oeste
Dominican Republic

Phone +1 809-379-3700
Fax +1 809-379-3777

info@do.kaercher.com
www.kaercher.com/do


MI/Po. · 08/2019 · Order no. 0.028-174.0 · Printed in Germany on FSC- or PEFC-certified paper · Rights to technical modifications reserved.